Technical sheet :

MHT 12330

MANITOU
HANDLING YOUR WORLD

Capacities		Metric	Imperial
Max. capacity	Q	33000 kg	72753 lbs
Load centre of gravity	c	1200 mm	47.244 in
Max. lifting height	h3	11.92 m	39 ft 1 in
Max. Reach	l4	6.6 m	21 ft 8 in
Weight and dimensions			
Unladen weight (with forks)		49000 kg	108027 lbs
Ground clearance	m4	0.59 m	1 ft 11 in
Wheelbase	y	4.9 m	16 ft 1 in
Length to face of forks	l2	8.37 m	27 ft 6 in
Overall width	b1	2.98 m	9 ft 9 in
Overall height	h17	3.6 m	11 ft 10 in
Overall cab width	b4	0.97 m	3 ft 2 in
Tilt-down angle	a5	100 °	100 °
Tilt-up angle	a4	10 °	10 °
External turning radius (over tyres)	Wa1	7.42 m	24 ft 4 in
Outer turning radius (with forks)	b15	9.33 m	30 ft 7 in
Forks length / width / section	l / e / s	2400 mm x 110 mm / 250 mm	94.488 in x 4.331 in / 9.843 in
Frame levelling corrector	a9	6 °	6 °
tires			
Standard tyres		21.00 R35	21.00 R35
Number of front wheels / rear wheels		2 / 2	2 / 2
Steering wheels (front / rear)		4 / 4	4 / 4
Drive wheels (front / rear)		2 / 2	2 / 2
Steering mode		2 wheel steer, 4 wheel steer, Crab mode	2 wheel steer, 4 wheel steer, Crab mode
Engine			
Engine brand		Deutz	Deutz
Engine norm		Stage 5 / Tier IV Final	Stage 5 / Tier IV Final
Engine model		TCD 6.1 L6	TCD 6.1 L6
Number of cylinders / Capacity of cylinders		6 - 6100 cm³	6 - 372.24 in³
I.C. Engine power rating / Power (kW)		245 Hp / 180 kW	245 Hp / 180 kW
Max. torque / Engine rotation		1000 Nm@1450 rpm	1000 Nm@1450 rpm
Engine cooling system		Water	Water
Number of batteries		2	2
Battery / Batteries capacity		12 V / 180 Ah	12 V / 180 Ah
Drawbar pull (Laden)		28400 daN	28400 daN
Transmission			
Transmission type		Hydrostatic with Powershift	Hydrostatic with Powershift
Number of gears (forward / reverse)		3 / 3	3 / 3
Max. travel speed		25 km/h	15.5 mph
Parking brake		Automatic negative parking brake	Automatic negative parking brake
Service brake		Oil-immersed multi-discs braking on front & rear axles	Oil-immersed multi-discs braking on front & rear axles
Gradeability (laden)		36 %	36 %
Hydraulics			
Hydraulic pump type		Load sensing pump	Load sensing pump
Hydraulic flow - Pressure		310 l/min - 350 Bar	310 l/min - 24 PSI
Tank capacities			
Engine oil		21 l	5.55 US gal
Hydraulic oil		570 l	150.59 US gal
Fuel tank		600 l	158.52 US gal
Diesel Exhaust fluid (AdBlue® type)		32 l	8.45 US gal
Noise and vibration			
Noise at driving position (LpA)		80 dB(A)	80 dB(A)
Noise to environment (LwA)		107 dB(A)	107 dB(A)
Vibration on hands/arms		< 2.5 m/s	< 8.2 ft/s
Miscellaneous			
Safety cab homologation		ROPS - FOPS cab (level 2)	ROPS - FOPS cab (level 2)
Controls		JSM	JSM
Attachment recognition system (E-Reco)		Standard	Standard

Dimensional drawing

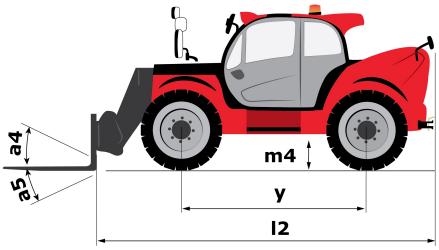

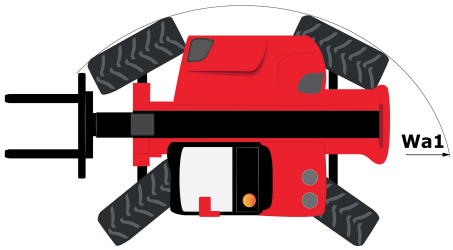

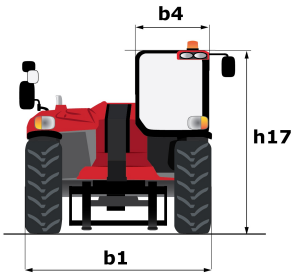

Load chart

Load Chart metric

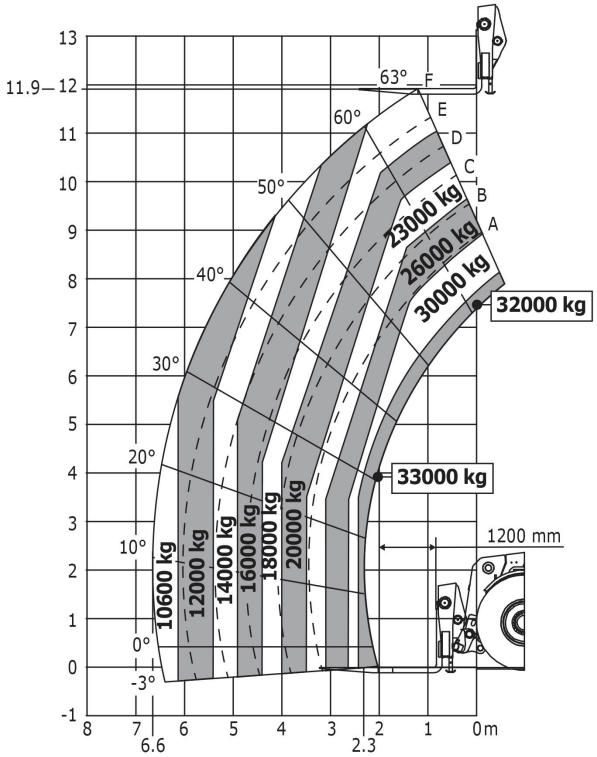

Rough terrain load chart (EN 1459 B) Metric

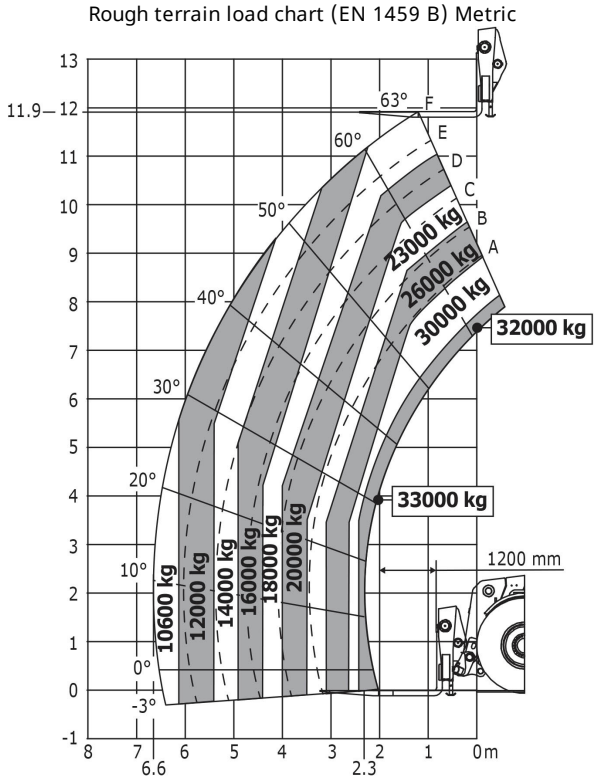

Machine on tyres with jib Metric

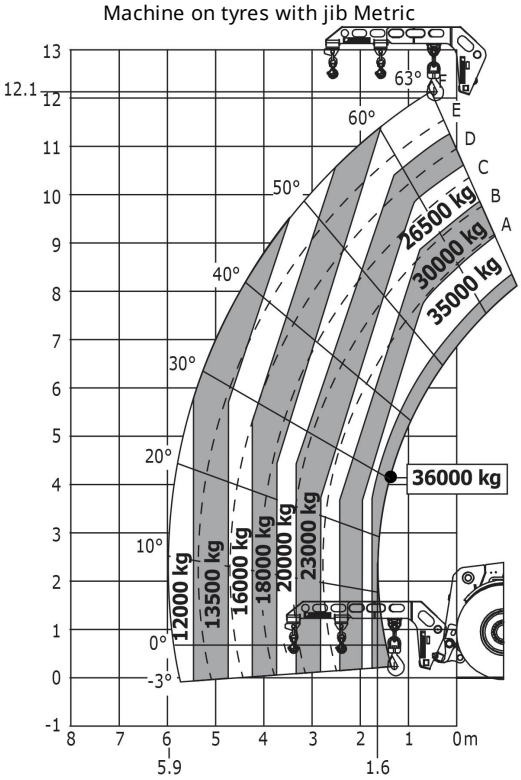

Siège Social
430 rue de l'Aubinière - 44150 Ancenis Cedex - France
Tel: +33(0)2 40 09 10 11 - Fax: +33 (0)2 40 09 10 97
www.manitou.com

This brochure describes versions and configuration options for Manitou products which may be fitted with different equipment. The equipment described in this brochure may be standard, optional or not available depending on version. Manitou reserves the right to change the specifications shown and described at any time and without prior warning. The manufacturer is not liable for the specifications given. For more information, contact your Manitou dealer. Non-contractual document. Product descriptions may differ from actual products. List of specifications is not comprehensive. The logos and visual identity of the company are the property of Manitou and may not be used without authorisation. All rights reserved. The photos and diagrams contained in thisbrochure are provided for information only.
MANITOU BF SA - Limited company with board of directors - Share capital: 39,668,399 euros - 857 802 508 RCS Nantes