Technical sheet :

200 ATJ

MANITOU
HANDLING YOUR WORLD

Capacities		Metric	Imperial
Working height	h21	20.35 m	66 ft 9 in
Platform height	h7	18.35 m	60 ft 2 in
Max. outreach	r1	12 m	39 ft 4 in
Overhang	h31	8 m	26 ft 3 in
Pendular arm rotation (top / bottom)		+69 ° / -66 °	+69 ° / -66 °
Platform capacity	Q	230 kg	507 lbs
Turret rotation		355 °	355 °
Platform rotation (right / left)		90 ° / 90 °	90 ° / 90 °
Number of people (inside / outside)		2 / 2	2 / 2
Weight and dimensions			
Platform weight*		10050 kg	22156 lbs
Platform dimensions (length x width)	lp / ep	2.1 m x 0.8 m	6 ft 11 in x 2 ft 7 in
Overall width	b1	2.47 m	8 ft 1 in
Overall length	l1	8.43 m	27 ft 8 in
Overall height	h17	2.7 m	8 ft 10 in
Overall length (stowed)	l9	6.24 m	20 ft 6 in
Overall height (stowed)	h18	2.99 m	9 ft 10 in
Floor height (access)	h20	500 mm	19.685 in
Counterweight offset (turret at 90°)	a7	0.11 m	4 in
Internal turning radius (over tyres)	b13	1.26 m	4 ft 2 in
External turning radius	Wa3	3.9 m	12 ft 10 in
Ground clearance at centre of wheelbase	m2	0.44 m	1 ft 5 in
Wheelbase	y	2.4 m	7 ft 10 in
Performances			
Drive speed - stowed		4.7 km/h	2.9 mph
Drive speed - raised		0.8 km/h	0.5 mph
Gradeability		40 %	40 %
Permissible leveling		5 °	5 °
Wheels			
Tyres type		Cured on foam filled tires	Cured on foam filled tires
Dimensions of front wheels / rear wheels		1025 x 365 mm - 1025 x 365 mm	1025 x 365 mm - 1025 x 365 mm
Drive wheels (front / rear)		2 / 2	2 / 2
Steering wheels (front / rear)		2 / 2	2 / 2
Braking wheels (front / rear)		0 / 2	0 / 2
Engine/Battery			
Engine brand / model		Yanmar - 3TNV88C	Yanmar - 3TNV88C
I.C. Engine power rating / Power (kW)		34 Hp / 25.5 kW	34 Hp / 25.5 kW
Miscellaneous			
Ground Pressure		20.65 daN/cm²	299.5 PSI
Hydraulic Pressure		335 Bar	23 PSI
Hydraulic tank capacity		80 l	21.14 US gal
Fuel tank		78 l	20.61 US gal
Standards compliance			
This machine is in compliance with:		European directives: 2006/42/EC- Machinery (revised EN280:2013) - 2004/108/EC (EMC) - 2006/95/EC (Low voltage)	European directives: 2006/42/EC- Machinery (revised EN280:2013) - 2004/108/EC (EMC) - 2006/95/EC (Low voltage)

*Varies according to options and standards of the country to which the machine is delivered

Load chart

Load Chart metric

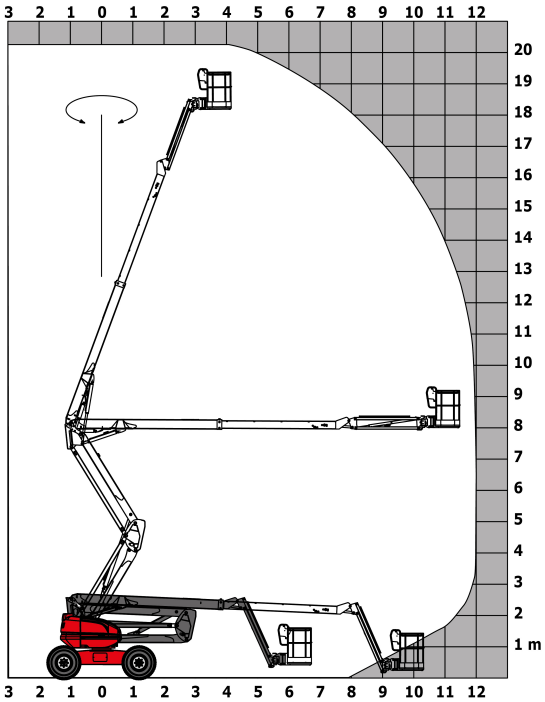

Dimensional drawing

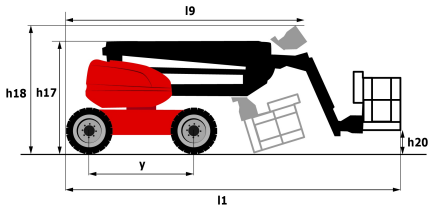

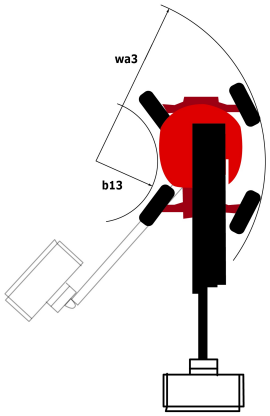

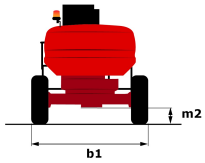

Equipment

Standard
230V Predisposition
4 simultaneous movements
4 wheel drive
4 wheel steer with crab mode
Audible alarm and illuminated indicator lamp (leveling, overload, lowering)
Backup electrical pump
CAN bus technology
Dead man pedal
Differential locking on rear axle
Easy Manager
Emergency stop button in platform and on frame
Engine with DPF
Front axle with limited slip
Fuel gauge with low level indicator
Galvanized basket 2,100 mm
Hour meter
LED rotating beacon
Large color screen on turret
Management via engine speed bearing
Oscillating front axle
Proportional controls
Stop & Go system

Optional
110 or 230V plug with differential circuit breaker
Access control keypad for easy link
Air predisposition
Battery cut-off
Beep on every movement
Beep upon travel
Biodegradable oil
Coded anti-start
Continuous turret rotation
Easy link with remote lock
Extreme cold oil
Fuel tank locking cap
Galvanized basket 2,100 mm

Optional
Galvanized basket 2.100 mm with lateral door
Highly capacity battery
Oil tank locking cap
Onboard generator (3,5 or 5 kW)
SPS : Secondary protection system
Safety kit (Harness + helmet)
Screen protection on the lower box control
Socket 230 V + differential circuit breaker
Turret cover with key lock
Water heater
Working light

Siège Social
430 rue de l'Aubinière - 44150 Ancenis Cedex - France
Tel: +33(0)2 40 09 10 11 - Fax: +33 (0)2 40 09 10 97
www.manitou.com

This brochure describes versions and configuration options for Manitou products which may be fitted with different equipment. The equipment described in this brochure may be standard, optional or not available depending on version. Manitou reserves the right to change the specifications shown and described at any time and without prior warning. The manufacturer is not liable for the specifications given. For more information, contact your Manitou dealer. Non-contractual document. Product descriptions may differ from actual products. List of specifications is not comprehensive. The logos and visual identity of the company are the property of Manitou and may not be used without authorisation. All rights reserved. The photos and diagrams contained in thisbrochure are provided for information only.
MANITOU BF SA - Limited company with board of directors - Share capital: 39,668,399 euros - 857 802 508 RCS Nantes